Listing and Technical Evaluation Report™

A Duly Authenticated Report from an Approved Agency

Report No: 2102-02

Issue Date: July 27, 2022

Revision Date: October 23, 2025

Subject to Renewal: October 1, 2027

CAMO® 5/16" Structural Screw for Use in Deck Ledger Board Applications

Trade Secret Report Holder:

National Nail® Corporation dba CAMO®

Phone: 800-968-6245 Website: www.camofasteners.com or www.nationalnail.com

CSI Designations:

DIVISION: 06 00 00 - WOOD, PLASTICS AND COMPOSITES

Section: 06 05 23 - Wood, Plastic, and Composite Fastenings Section: 06 11 00 - Wood Framing Section: 06 15 00 - Wood Decking

1 Innovative Product Evaluated[1]

1.1 CAMO 5/16" Structural Series Screws

RYAN J DEXTER Digitally signed by RYAN J DEXTER DN: c=US, o=Unaffiliated, dnQualifier=A01410C000001 8F3465EBA400007CB4, cn=RYAN J DEXTER Date: 2025.10.23 13:30:28 -04'00'

RYAN JOSEPH DEXTER LICENSE No 69484 STATE OF FLORIDA PROFESSIONAL ENGINEER

2 Product Description and Materials

2.1 The innovative product evaluated in this report is shown in **Figure 1**.

Figure 1. CAMO 5/16" Flat Head Screw

DrJ Engineering, LLC
Certificate of Authorization #29766

2.2 CAMO 5/16" Structural Series Screws are threaded fasteners manufactured using standard cold-forming processes and are subsequently heat-treated and coated.

2.3 CAMO 5/16" Structural Series Screws are available with a proprietary coating system designated as PROTECH™ Ultra 4.

2.4 CAMO 5/16" Structural Series Screws have a round flat head with a T40 star drive and are partially threaded.

2.5 Fastener Material

2.5.1 CAMO 5/16" Structural Series Screws are made of hardened carbon steel grade 10B18, 1022, or 10B21 wire conforming to ASTM A510 and/or Grade 17MnB3 or 19MnB4 wire conforming to DIN 1654.

2.5.2 CAMO 5/16" Structural Series Screws evaluated in this report are outlined in **Table 1**.

Information contained in this report was developed using report holder's confidential intellectual property (IP) and trade secrets (TS), which is protected by Defend Trade Secrets Act 2016, © DrJ Engineering, LLC

Table 1. Fastener Specifications[1] – PROTECH Ultra 4 Coated

Fastener Designation	Head				Length (in)		Diameter (in)			Bending Yield Strength,[4] f_{yb} (psi)	Allowable Steel Strength (lbs)	
	Style	Drive System	Diameter (in)	Height (in)	Fastener[2]	Thread[3]	Shank	Minor	Major		Tensile	Shear[5]
5/16" x 3 1/2"	Flat Head	T40 Star Drive	0.738	0.079	3.500	2.000	0.220	0.197	0.307	175,000	1,580	1,150
5/16" x 4"					4.000	2.370						
5/16" x 5"					5.000	2.752						

SI: 1 in = 25.4 mm, 1 lb = 4.45 N, 1 psi = 0.00689 MPa

1. Tabulated fastener dimensions are measured on uncoated fasteners. Finished dimensions are different due to the proprietary coating added.
2. Fastener nominal length is measured from the underside of the head to the tip.
3. Thread length includes tapered tip.
4. Bending yield strength, or F_{yb}, is determined in accordance with ASTM F1575 using minor thread diameter when fastener is tested in threaded section.
5. Shear strength is determined in accordance with AISI S904 using minor thread diameter when fastener is tested in threaded section.

2.6 Corrosion Resistance

2.6.1 CAMO 5/16" Structural Series Screws may be used where screws are required to exhibit corrosion resistance when exposed to adverse environmental conditions and/or in chemically treated wood, which are subject to the limitations of this report, and are alternatives to hot-dipped galvanized screws with a coating weight in compliance with ASTM A153, Class D.

2.6.2 The CAMO 5/16" Structural Series Screws having the proprietary PROTECH Ultra 4 coatings and are equivalent to the protection provided by code-approved hot-dipped galvanized coatings meeting ASTM A153, Class D (IBC Section 2304.10.6 and IRC Section R304.3[2]) when recognized for use by the American Wood Protection Association (AWPA) in untreated wood and Ground Contact – General Use pressure treated wood for exterior, freshwater general construction applications (i.e., Ground Contact – General Use AWPA UC1 UC4A).

2.6.3 Fire-Retardant Treated (FRT) Wood Applications

2.6.3.1 CAMO 5/16" Structural Series Screws with the proprietary PROTECH Ultra 4 coatings are recognized for use in FRT lumber provided the conditions set forth by the FRT lumber manufacturer are met, including appropriate strength reductions.

2.7 Wood Material

2.7.1 Wood main and side members must be solid-sawn lumber or boards having an assigned specific gravity as given in the respective tables of this report.

2.8 As needed, review material properties for design in **Section 6** and the regulatory evaluation in **Section 8**.

Information contained in this report was developed using report holder's confidential intellectual property (IP) and trade secrets (TS), which is protected by Defend Trade Secrets Act 2016, © DrJ Engineering, LLC

3 Definitions[3]

3.1 New Materials[4] are defined as building materials, equipment, appliances, systems, or methods of construction, not provided for by prescriptive and/or legislatively adopted regulations, known as alternative materials.[5] The design strength and permissible stresses shall be established by tests[6] and/or engineering analysis.[7]

3.2 Duly authenticated reports[8] and research reports[9] are test reports and related engineering evaluations that are written by an approved agency[10] and/or an approved source.[11]

3.2.1 These reports utilize intellectual property and/or trade secrets to create public domain material properties for commercial end-use.

3.2.1.1 This report protects confidential Intellectual Property and trade secretes under the regulation, 18.US.Code.90, also known as Defend Trade Secrets Act of 2016 (DTSA).[12]

3.3 An approved agency is *"approved"* when it is ANAB ISO/IEC 17065 accredited. DrJ Engineering, LLC (DrJ) is accredited and listed in the ANAB directory.

3.4 An approved source is *"approved"* when a professional engineer (i.e., Registered Design Professional, hereinafter RDP) is properly licensed to transact engineering commerce. The regulatory authority governing approved sources is the state legislature via its professional engineering regulations.[13]

3.5 Testing and/or inspections conducted for this duly authenticated report were performed by an ISO/IEC 17025 accredited testing laboratory, an ISO/IEC 17020 accredited inspection body, and/or a licensed RDP.

3.5.1 The Center for Building Innovation (CBI) is ANAB[14] ISO/IEC 17025 and ISO/IEC 17020 accredited.

3.6 The regulatory authority shall enforce[15] the specific provisions of each legislatively adopted regulation. If there is a non-conformance, the specific regulatory section and language of the non-conformance shall be provided in writing[16] stating the nonconformance and the path to its cure.

3.7 The regulatory authority shall accept duly authenticated reports from an approved agency and/or an approved source with respect to the quality and manner of use of new materials or assemblies as provided for in regulations regarding the use of alternative materials, designs, or methods of construction.[17]

3.8 ANAB is an International Accreditation Forum (IAF) Multilateral Recognition Arrangement (MLA) signatory. Therefore, recognition of certificates and validation statements issued by conformity assessment bodies accredited by all other signatories of the IAF MLA with the appropriate scope shall be approved.[18] Thus, all ANAB ISO/IEC 17065 duly authenticated reports are approval equivalent,[19] and can be used in any country that is an MLA signatory found at this link: https://iaf.nu/en/recognised-abs/

3.9 Approval equity is a fundamental commercial and legal principle.[20]

4 Applicable Local, State, and Federal Approvals; Standards; Regulations[21]

4.1 Local, State, and Federal

4.1.1 Approved in all local jurisdictions pursuant to ISO/IEC 17065 duly authenticated report use, which includes, but is not limited to, the following featured local jurisdictions: Austin, Baltimore, Broward County, Chicago, Clark County, Dade County, Dallas, Detroit, Denver, DuPage County, Fort Worth, Houston, Kansas City, King County, Knoxville, Las Vegas, Los Angeles City, Los Angeles County, Miami, Nashville, New York City, Omaha, Philadelphia, Phoenix, Portland, San Antonio, San Diego, San Jose, San Francisco, Seattle, Sioux Falls, South Holland, Texas Department of Insurance, and Wichita.[22]

4.1.2 Approved in all state jurisdictions pursuant to ISO/IEC 17065 duly authenticated report use, which includes, but is not limited to, the following featured states: California, Florida, New Jersey, Oregon, New York, Texas, Washington, and Wisconsin.[23]

Information contained in this report was developed using report holder's confidential intellectual property (IP) and trade secrets (TS), which is protected by Defend Trade Secrets Act 2016, © DrJ Engineering, LLC

4.1.3 Approved by the Code of Federal Regulations Manufactured Home Construction: Pursuant to Title 24, Subtitle B, Chapter XX, Part 3282.14[24] and Part 3280[25] pursuant to the use of ISO/IEC 17065 duly authenticated reports.

4.1.4 Approved means complying with the requirements of local, state, or federal legislation.

4.2 Standards

4.2.1 *AISI S904: Standard Test Methods for Determining the Tensile and Shear of Screws*

4.2.2 *ANSI/AWC NDS: National Design Specification (NDS) for Wood Construction*

4.2.3 *ASTM A153: Standard Specification for Zinc Coating (Hot-Dip) on Iron and Steel Hardware*

4.2.4 *ASTM A510: Standard Specification for General Requirements for Wire Rods and Coarse Round Wire, Carbon Steel, and Alloy Steel*

4.2.5 *ASTM B117: Standard Practice for Operating Salt Spray (Fog) Apparatus*

4.2.6 *ASTM D1761: Standard Test Methods for Mechanical Fasteners in Wood and Wood-Based Materials*

4.2.7 *ASTM F1575-21: Standard Test Method for Determining Bending Yield Moment of Nails*

4.2.8 *ASTM G85: Standard Practice for Modified Salt Spray (Fog) Testing*

4.2.9 *ASTM G198: Standard Test Method for Determining the Relative Corrosion Performance of Driven Fasteners in Contact with Treated Wood*

4.3 Regulations

4.3.1 IBC – 18, 21, 24: International Building Code®

4.3.2 IRC – 18, 21, 24: International Residential Code®

4.3.3 FBC-B—20, 23: Florida Building Code[26] – Building (FL 41741)

4.3.4 FBC-R—20, 23: Florida Building Code[26] – Residential (FL 41741)

4.3.5 LABC—17, 20, 22: Los Angeles Building Code[27]

4.3.6 *LARC—17, 20, 22: Los Angeles Residential Code[27]*

5 Listed[28]

5.1 Equipment, materials, products, or services included in a List published by a nationally recognized testing laboratory (i.e., CBI), an approved agency (i.e., CBI and DrJ), and/or and approved source (i.e., DrJ), or other organization(s) concerned with product evaluation (i.e., DrJ), that maintains periodic inspection (i.e., CBI) of production of listed equipment or materials, and whose listing states either that the equipment or material meets nationally recognized standards or has been tested and found suitable for use in a specified manner.

6 Tabulated Properties Generated from Nationally Recognized Standards

6.1 CAMO $^{5}/_{16}$" Structural Series Screws are used for attaching the deck ledger to the band joist of a building in accordance with IBC Section 1604.8.3 and IRC Section R507.9. See **Section 9** for installation requirements.

6.2 CAMO $^{5}/_{16}$" Structural Series Screws can be used for attaching ledger boards to wall studs with zero, one, or two layers of Gypsum Wall Board (GWB) between the ledger and the wall studs.

6.3 General

6.3.1 CAMO $^{5}/_{16}$" Structural Series Screws are installed without lead holes, as prescribed in NDS.

6.3.2 CAMO $^{5}/_{16}$" Structural Series Screws are governed by the applicable code and the provisions for dowel type fasteners in NDS.

6.3.3 CAMO $^{5}/_{16}$" Structural Series Screws may be used where screws are required to exhibit corrosion resistance when exposed to adverse environmental conditions and/or in chemically treated wood.

Information contained in this report was developed using report holder's confidential intellectual property (IP) and trade secrets (TS), which is protected by Defend Trade Secrets Act 2016, © DrJ Engineering, LLC

6.3.4 CAMO $^{5}/_{16}$" Structural Series Screws are subject to the limitations of this report and are approved as alternatives to hot-dipped galvanized screws with a coating weight in compliance with ASTM A153, Class D.

6.3.5 Screws with the proprietary coating PROTECH Ultra 4, were evaluated for contact with wood chemically treated AWPA UC4 Ground Contact – General Use retention levels.

6.3.6 Unless otherwise noted, adjustment of the design stresses for duration of load shall be in accordance with the applicable code.

6.4 Reference Design Values for Deck Ledger to Band Joist Attachment

6.4.1 CAMO $^{5}/_{16}$" Structural Series Screws are designed for attaching the deck ledger to the band joist of a building in accordance with IBC Section 1604.8.3 and IRC Section R507.9. This connection is shown in **Figure 2**.

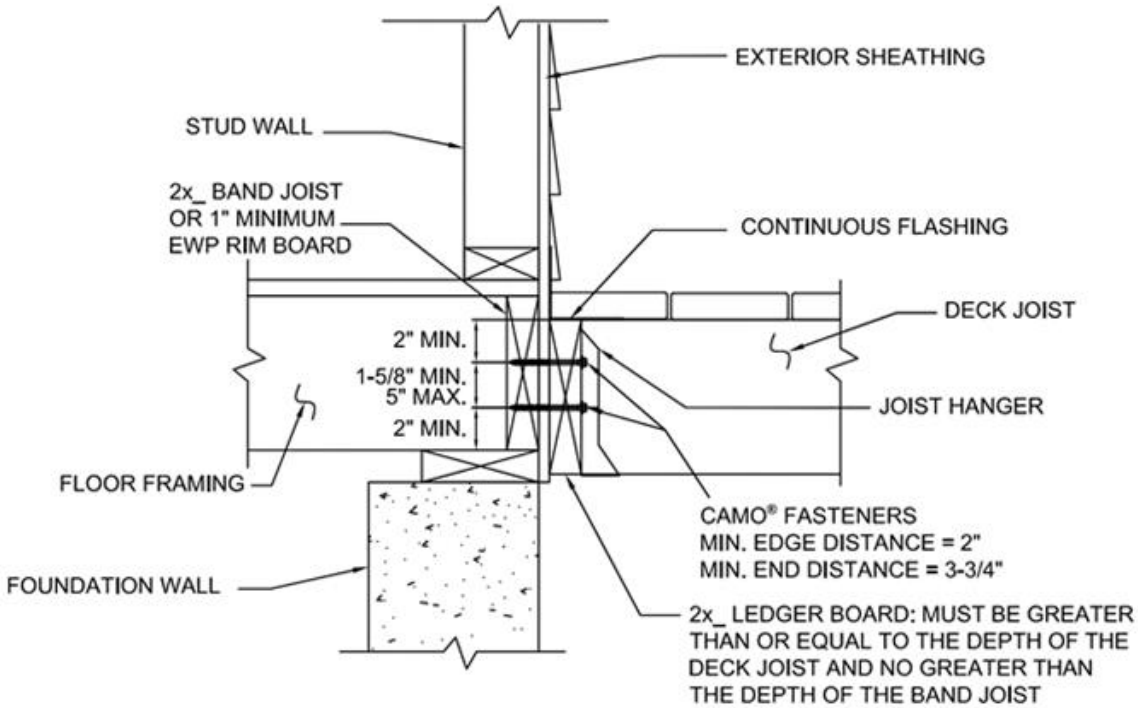

Figure 2. CAMO Deck Ledger Connection to Band Joist

6.4.2 The IRC provides prescriptive fastener spacing for the attachment of a deck ledger to a rim joist with $^{1}/_{2}$" diameter lag screws or through bolts as shown in IRC Table R507.9.1.3(1).

6.4.2.1 **Table 2** and **Table 3** provide the CAMO $^{5}/_{16}$" Structural Series Screws spacing required to provide performance at least equivalent to the lag screws found in IRC Table R507.9.1.3(1), in accordance with IBC Section 104.2.3,[29] IBC Section 1604.8.3, IRC Section R104.2.2,[30] and IRC Section R507.9 in accordance with generally accepted engineering practice.

6.4.2.1.1 **Table 2** and **Table 3** provide screw spacing for materials found in IRC Section R507.9, as well as a wider range of materials commonly used for rim joists. Screw spacing values are provided for four loading conditions.

6.4.2.2 When installed in accordance with the spacing requirements of **Table 2** or **Table 3**, the listed CAMO $^{5}/_{16}$" Structural Series Screws provide equivalent performance to IRC Table R507.9.1.3(1).

Information contained in this report was developed using report holder's confidential intellectual property (IP) and trade secrets (TS), which is protected by Defend Trade Secrets Act 2016, © DrJ Engineering, LLC

Table 2. CAMO $^5/_{16}$" x $3^1/_2$" and $^5/_{16}$" x 4" Structural Screw Spacing for Items in IRC Table R507.9.1.3(1) and Other Materials and Loading Conditions[1]

Fastener Designation[2,3]	Load Case[9]	2x Nominal Ledger Species[4,5,6]	Band Joist Material[7,8]	Maximum On-Center Spacing of Fasteners (in)						
				Maximum Deck Joist Spans (ft)						
				Up to 6'	Up to 8'	Up to 10'	Up to 12'	Up to 14'	Up to 16'	Up to 18'
$^5/_{16}$" x $3^1/_2$" Structural Screws and $^5/_{16}$" x 4" Structural Screws	LL + DL 40 + 10	HF	2x Sawn Lumber	29	21	17	10	8	7	6
			$1^1/_8$" OSB	26	20	16	8	7	6	5
		SP	2x Sawn Lumber	27	20	16	13	11	9	8
			$1^1/_8$" OSB	28	21	17	10	9	8	7
	SL + DL 50 + 10	HF	2x Sawn Lumber	24	18	10	8	7	6	5
			$1^1/_8$" OSB	22	16	8	7	6	5	4
		SP	2x Sawn Lumber	23	17	13	10	9	8	7
			$1^1/_8$" OSB	24	18	10	9	7	6	6
	SL + DL 60 + 10	HF	2x Sawn Lumber	20	11	8	7	6	5	4
			$1^1/_8$" OSB	19	9	7	6	5	4	4
		SP	2x Sawn Lumber	19	14	11	9	8	7	6
			$1^1/_8$" OSB	20	11	9	7	6	5	5
	SL + DL 70 + 10	HF	2x Sawn Lumber	18	9	7	6	5	4	4
			$1^1/_8$" OSB	16	8	6	5	4	4	3
		SP	2x Sawn Lumber	17	12	9	8	7	6	5
			$1^1/_8$" OSB	18	10	8	6	5	5	4

SI: 1 in = 25.4 mm, 1 psf = 0.0479 kN/m^2

1. Based on load duration of 1.0. Spacing may be adjusted by the applicable load duration as specified in NDS.
2. Fasteners are required to have full thread penetration into the main member. Excess fastener length extending beyond the main member is not reflected in the table above.
3. Fasteners shall be installed per **Section 9** of this report.
4. Solid-sawn ledgers shall be HF or SP species (specific gravity of 0.43 and 0.55, respectively). Ledgers shall be designed by others.
5. Minimum ledger board requirements: $1^1/_2$" thickness and $7^1/_4$" depth.
6. Ledger materials tested in the wet service condition.
7. A maximum $^1/_2$" structural sheathing may be installed between the ledger and band joist. Up to $^1/_2$" thickness of stacked washers shall be permitted to substitute for up to $^1/_2$" on allowable sheathing thickness where combined with wood structural panel or lumber sheathing.
8. Minimum band joist requirements: SPF (specific gravity of 0.42) solid-sawn lumber $1^1/_2$" thick and $7^1/_4$" depth; OSB 1" thick and $7^1/_2$" depth.
9. Snow load shall not be assumed to act concurrently with live load.

Information contained in this report was developed using report holder's confidential intellectual property (IP) and trade secrets (TS), which is protected by Defend Trade Secrets Act 2016, © DrJ Engineering, LLC

Table 3. CAMO $^5/_{16}$" x 5" Structural Screw Spacing for Items in IRC Table R507.9.1.3(1) and Other Materials and Loading Conditions[1]

Fastener Designation[2,3]	Load Case[9]	2x Nominal Ledger Species[4,5,6]	Band Joist Material[7,8]	Maximum On-center Spacing of Fasteners (in)						
				Maximum Deck Joist Spans (ft)						
				Up to 6'	Up to 8'	Up to 10'	Up to 12'	Up to 14'	Up to 16'	Up to 18'
$^5/_{16}$" x 5" Structural Screw	LL + DL 40 + 10	HF	2x Sawn Lumber	30	23	18	15	10	8	7
			$1^1/_8$" OSB	29	22	17	9	8	7	6
		SP	2x Sawn Lumber	27	20	16	14	12	10	9
			$1^1/_8$" OSB	28	21	17	13	11	10	9
	SL + DL 50 + 10	HF	2x Sawn Lumber	27	20	16	9	8	7	6
			$1^1/_8$" OSB	24	18	9	8	7	6	5
		SP	2x Sawn Lumber	23	17	14	12	10	9	8
			$1^1/_8$" OSB	24	18	13	11	9	8	7
	SL + DL 60 + 10	HF	2x Sawn Lumber	23	17	10	8	7	6	5
			$1^1/_8$" OSB	21	16	8	7	6	5	4
		SP	2x Sawn Lumber	19	15	12	10	8	7	6
			$1^1/_8$" OSB	20	14	11	9	8	7	6
	SL + DL 70 + 10	HF	2x Sawn Lumber	20	11	8	7	6	5	4
			$1^1/_8$" OSB	18	9	7	6	5	4	4
		SP	2x Sawn Lumber	17	13	10	9	7	6	6
			$1^1/_8$" OSB	18	13	10	8	7	6	5

SI: 1 in = 25.4 mm, 1 psf = 0.0479 kN/m^2

1. Based on load duration of 1.0. Spacing may be adjusted by the applicable load duration as specified in NDS.
2. Fasteners are required to have full thread penetration into the main member. Excess fastener length extending beyond the main member is not reflected in the table above.
3. Fasteners shall be installed per **Section 9** of this report.
4. Solid-sawn ledgers shall be HF or SP species (specific gravity of 0.43 and 0.55, respectively). Ledgers shall be designed by others.
5. Minimum ledger board requirements: $1^1/_2$" thickness and $7^1/_4$" depth.
6. Ledger materials tested in the wet service condition.
7. A maximum $^1/_2$" structural sheathing may be installed between the ledger and band joist. Up to $^1/_2$" thickness of stacked washers shall be permitted to substitute for up to $^1/_2$" on allowable sheathing thickness where combined with wood structural panel or lumber sheathing.
8. Minimum band joist requirements: SPF (specific gravity of 0.42) solid-sawn lumber $1^1/_2$" thick and $7^1/_4$" depth; OSB 1" thick and $7^1/_2$" depth.
9. Snow load shall not be assumed to act concurrently with live load.

Information contained in this report was developed using report holder's confidential intellectual property (IP) and trade secrets (TS), which is protected by Defend Trade Secrets Act 2016, © DrJ Engineering, LLC

6.5 *Reference Lateral Design Values for Deck Ledger to Stud Attachment*

6.5.1 *Without GWB Interlayer*

6.5.1.1 Installation details for ledger to stud connections without GWB for 2 x 6, 2 x 8, and 2 x 10 ledgers are shown in **Figure 3**, **Figure 4**, and **Figure 5**, respectively.

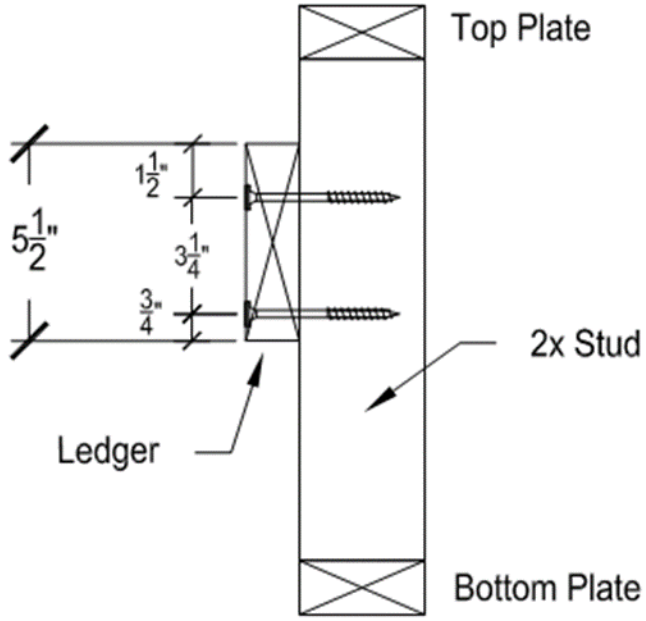

Figure 3. 2 x 6 Ledger Directly Attached to Stud

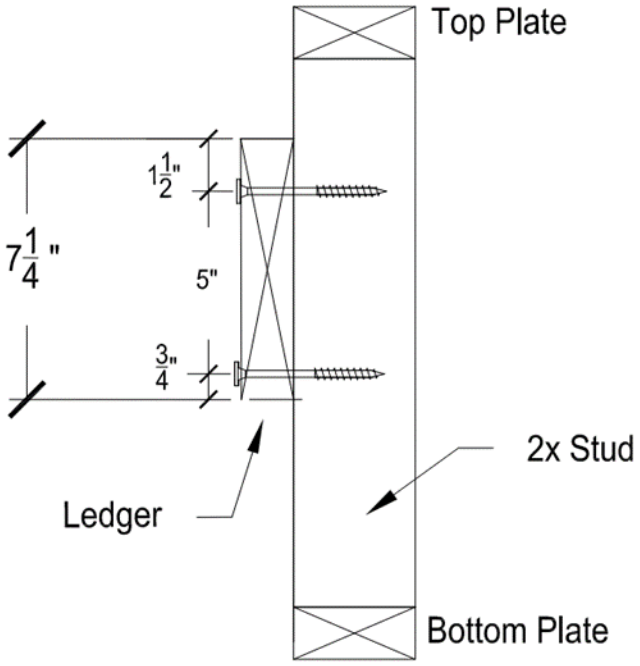

Figure 4. 2 x 8 Ledger Directly Attached to Stud

Information contained in this report was developed using report holder's confidential intellectual property (IP) and trade secrets (TS), which is protected by Defend Trade Secrets Act 2016, © DrJ Engineering, LLC

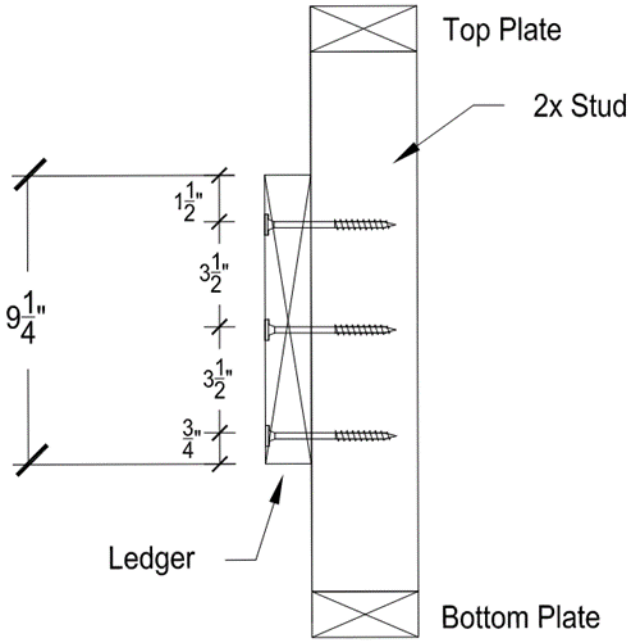

Figure 5. 2 x 10 Ledger Directly Attached to Stud

6.5.2 *With One Layer GWB Interlayer*

6.5.2.1 Installation details for ledger to stud connections with a single layer of GWB for 2 x 6, 2 x 8, and 2 x 10 ledgers are shown in **Figure 6**, **Figure 7**, and **Figure 8**, respectively.

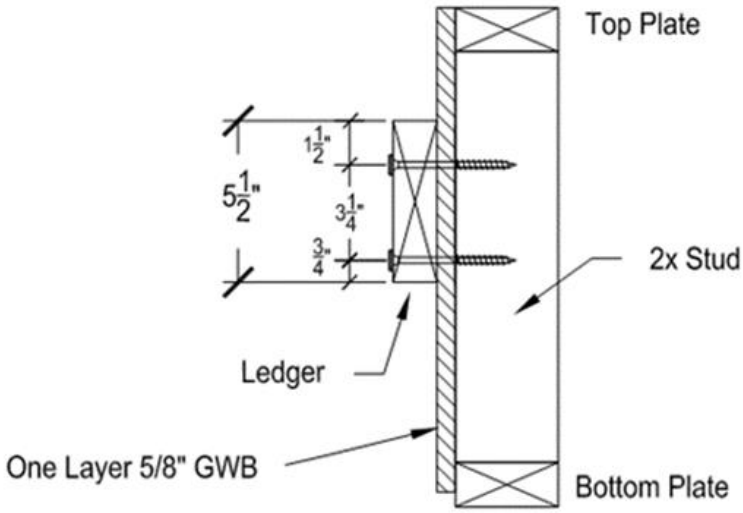

Figure 6. 2 x 6 Ledger Attached to Stud through One Layer of GWB

Information contained in this report was developed using report holder's confidential intellectual property (IP) and trade secrets (TS), which is protected by Defend Trade Secrets Act 2016, © DrJ Engineering, LLC

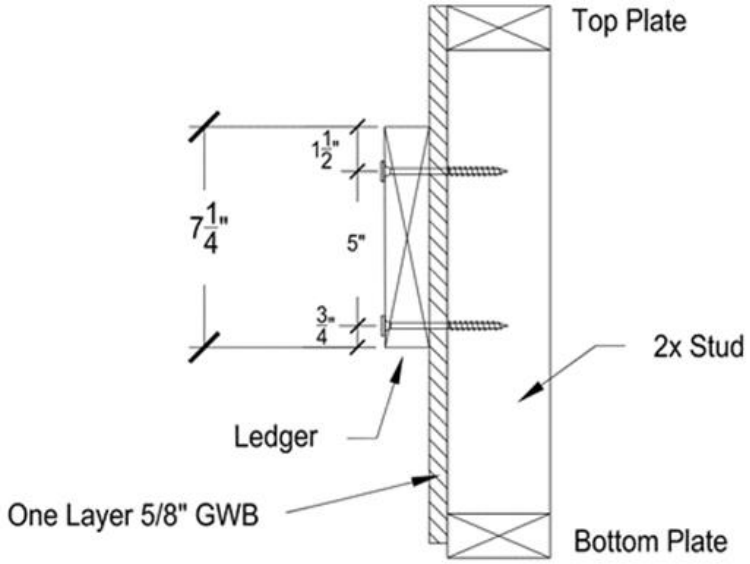

Figure 7. 2 x 8 Ledger Attached to Stud through One Layer of GWB

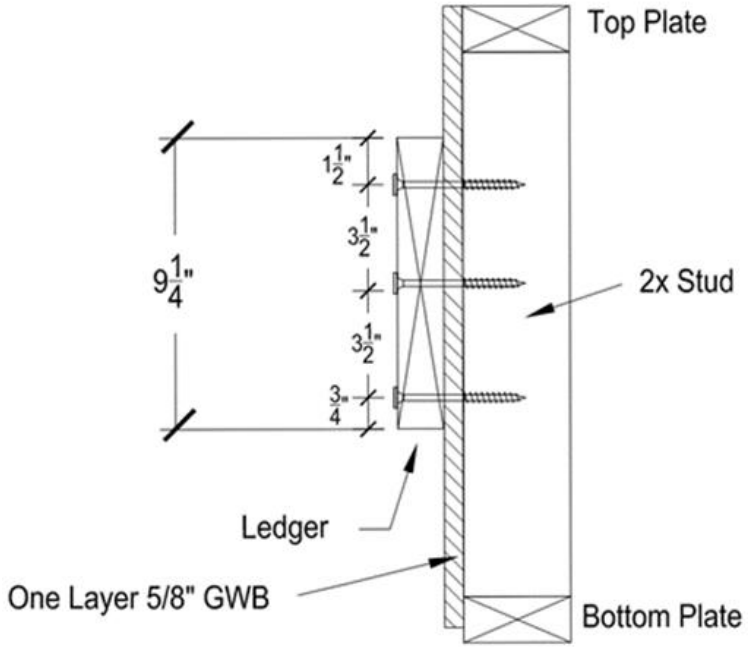

Figure 8. 2 x 10 Ledger Attached to Stud through One Layer of GWB

6.5.3 *With Two Layers GWB Interlayer*

6.5.3.1 Installation details for ledger to stud connections with a double layer of GWB for 2 x 6, 2 x 8, and 2 x 10 ledgers are shown in **Figure 9**, **Figure 10**, and **Figure 11**, respectively.

Information contained in this report was developed using report holder's confidential intellectual property (IP) and trade secrets (TS), which is protected by Defend Trade Secrets Act 2016, © DrJ Engineering, LLC

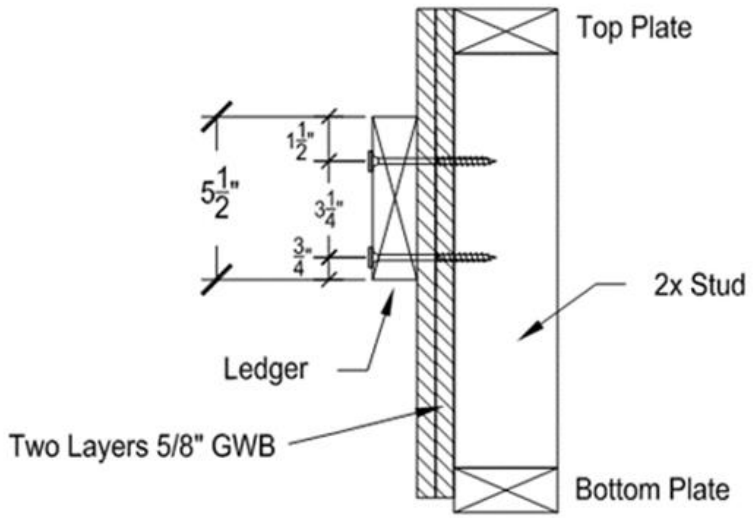

Figure 9. 2 x 6 Ledger Attached to Stud through Two Layers of GWB

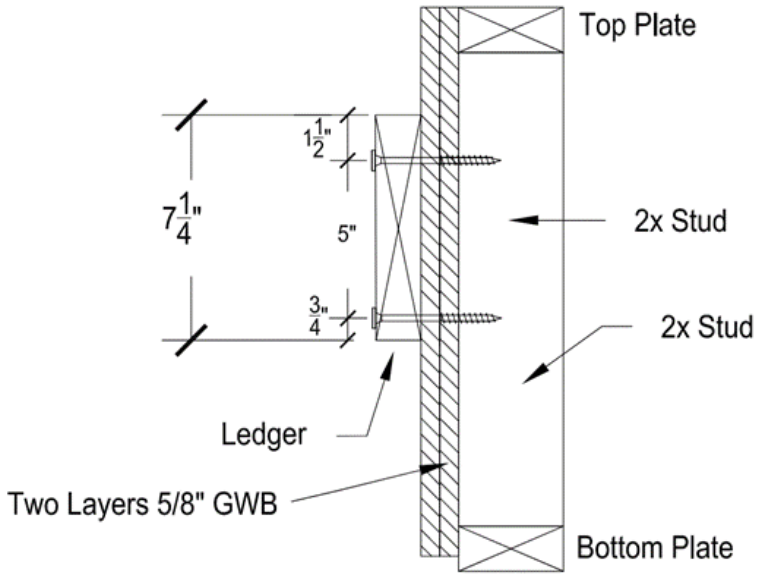

Figure 10. 2 x 8 Ledger Attached to Stud through Two Layers of GWB

Information contained in this report was developed using report holder's confidential intellectual property (IP) and trade secrets (TS), which is protected by Defend Trade Secrets Act 2016, © DrJ Engineering, LLC

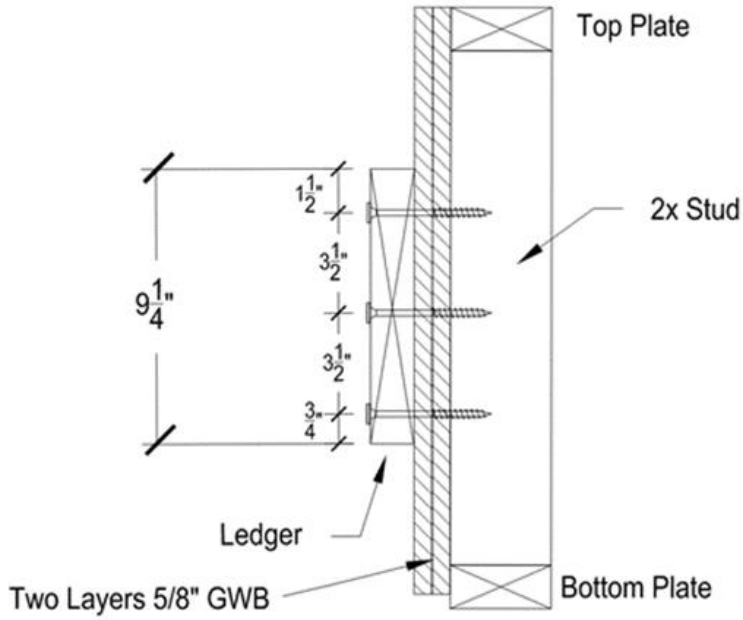

Figure 11. 2 x 10 Ledger Attached to Stud through Two Layers of GWB

6.5.4 Reference lateral design values for the deck ledger to stud connections detailed in **Figure 3** through **Figure 11** are provided in **Table 4**. The values in **Table 4** apply where the ledger is applied either directly over the studs or with up to two layers of $^5/_8$″ GWB between the ledger and studs.

Table 4. Design Values for Ledger to Stud Attachment

Fastener Designation	Minimum Thread Penetration into Main Member (in)	Layers of GWB[8]	Allowable Load per Stud Connection[3,4,5,6,7] (lb)		
			Ledger Size[1,2]		
			2 x 6	2 x 8	2 x 10
$^5/_{16}$" x $3^1/_2$"	2	0	580	580	840
$^5/_{16}$" x 4"	$1^3/_8$	1	600	600	890
$^5/_{16}$" x 5"	$3^1/_2$	0	1015	1015	1485
	$2^7/_8$	1	895	895	1255
	$2^1/_4$	2	750	750	1175

SI: 1 in = 25.4 mm, 1 lb = 4.45 N

1. Two fasteners are required for 2 x 6 and 2 x 8 ledger connections. Three fasteners are required for 2 x 10 ledger connections. Additional fasteners prohibited.
2. SPF ledger with minimum specific gravity of 0.42.
3. The tabulated values apply where the ledger is installed either directly over the studs or with up to two layers of $^5/_8$" gypsum between the ledger and studs.
4. Allowable loads shall be limited to parallel-to-grain loaded solid sawn main members (minimum 2" nominal). Wood side members shall be loaded perpendicular to grain.
5. Allowable loads are shown at the wood load duration factor of C_D = 1.00. Loads may be increased for load duration as permitted by the building code up to a C_D = 1.60. All adjustment factors shall be applied per NDS. For in-service moisture content greater than nineteen percent (19%), use Wet Service Factor (C_M) = 0.70.
6. For LRFD values, the reference connection design values shall be adjusted in accordance with NDS Section 11.3.
7. Fasteners shall be centered in the stud and spaced as shown in **Figure 3** through **Figure 11**. The stud minimum end distance is $6^3/_4$" when loaded toward the end and 4" when loaded away from the end. The ledger end distance is 6" for full values. For ledger end distances under 6", the reference connection design values shall be adjusted in accordance with NDS Section 12.5.
8. GWB must be attached as required per the building code.

Information contained in this report was developed using report holder's confidential intellectual property (IP) and trade secrets (TS), which is protected by Defend Trade Secrets Act 2016, © DrJ Engineering, LLC

6.6 Where the application falls outside of the performance evaluation, conditions of use, and/or installation requirements set forth herein, alternative techniques shall be permitted in accordance with accepted engineering practice and experience. This includes but is not limited to the following areas of engineering: mechanics or materials, structural, building science, and fire science.

7 Certified Performance[31]

7.1 All construction methods shall conform to accepted engineering practices to ensure durable, livable, and safe construction and shall demonstrate acceptable workmanship reflecting journeyman quality of work of the various trades.[32]

7.2 The strength and rigidity of the component parts and/or the integrated structure shall be determined by engineering analysis or by suitable load tests to simulate the actual loads and conditions of application that occur.[33]

8 Regulatory Evaluation and Accepted Engineering Practice

8.1 CAMO $^{5}/_{16}$" Structural Series Screws were evaluated to determine:

8.1.1 Use for attachment of deck ledgers to the building structure. This application includes attachments to Spruce Pine-Fir (SPF) band joists[34] and Oriented Strand Board (OSB) band joists.

8.1.2 Lateral strength of ledger connections to wood-framed walls. This application includes zero, one, or two layers of $^{5}/_{8}$″ GWB between the ledger and the wall studs.

8.2 For conventionally framed buildings, the deck ledger is required to be attached to the band joist in accordance with IBC Section 1604.8.3 or IRC Section R507.9, as applicable.

8.2.1 Where a band joist is not used, as in some truss installations, an engineered design is required.

8.3 Corrosion resistance was evaluated in accordance with ASTM B117, ASTM G85, and ASTM G198.

8.4 Use of fasteners in locations exposed to saltwater or saltwater spray is outside the scope of this report.

8.5 Any building code, regulation and/or accepted engineering evaluations (i.e., research reports, duly authenticated reports, etc.) that are conducted for this Listing were performed by DrJ, which is an ISO/IEC 17065 accredited certification body and a professional engineering company operated by RDP or approved sources. DrJ is qualified[35] to practice product and regulatory compliance services within its scope of accreditation and engineering expertise,[36] respectively.

8.6 Engineering evaluations are conducted with DrJ's ANAB accredited ICS code scope of expertise, which is also its areas of professional engineering competence.

8.7 Any regulation specific issues not addressed in this section are outside the scope of this report.

9 Installation

9.1 Installation shall comply with the approved construction documents, the manufacturer installation instructions, this report, and the applicable building code.

9.2 In the event of a conflict between the manufacturer installation instructions and this report, contact the manufacturer for counsel on the proper installation method.

9.3 Fasteners shall be installed with a $^{1}/_{2}$" (12.7 mm), low rpm/high torque electric drill (450 rpm).

9.4 Fasteners shall be installed with manufacturer-supplied bits.

9.5 Fasteners shall not be struck with a hammer during installation.

9.6 Lead holes are not required but may be used where lumber is prone to splitting.

Information contained in this report was developed using report holder's confidential intellectual property (IP) and trade secrets (TS), which is protected by Defend Trade Secrets Act 2016, © DrJ Engineering, LLC

9.7 Installer shall use appropriate/required personal protection equipment during installation and must not place fastener in mouth.

9.8 Install CAMO $^{5}/_{16}$" Structural Series Screws so that the threads fully engage the band joist material and the fastener tip extends beyond the back face of the band joist material when fully seated against the installed ledger. Do not overdrive fasteners.

9.9 For deck ledger connections, stagger the CAMO $^{5}/_{16}$" Structural Series Screws from the top to the bottom of the ledger along its length while maintaining the required edge and end distances.

9.9.1 **Figure 2** provides a deck ledger installation detail including minimum required spacing and end and edge distances.

9.10 For ledger to stud connections, fasteners shall be centered in the stud and spaced as shown in **Figure 3** through **Figure 11**.

9.10.1 The stud minimum end distance is $6^{3}/_{4}$" when loaded toward the end, and 4" when loaded away from the end.

9.10.2 The fasteners shall be installed with a minimum 6" end distance on the ledger.

10 Substantiating Data

10.1 Testing has been performed under the supervision of a professional engineer and/or under the requirements of ISO/IEC 17025 as follows:

10.1.1 Ledger assembly testing in accordance with ASTM D1761

10.1.2 Corrosion resistance testing in accordance with ASTM B117, ASTM G85, and ASTM G198

10.2 Properties for CAMO $^{5}/_{16}$" Structural Series Screws from Report Number 2102-01.

10.3 Information contained herein may include the result of testing and/or data analysis by sources that are approved agencies, approved sources, and/or an RDP. Accuracy of external test data and resulting analysis is relied upon.

10.4 Where applicable, testing and/or engineering analysis are based upon provisions that have been codified into law through state or local adoption of regulations and standards. The developers of these regulations and standards are responsible for the reliability of published content. DrJ's engineering practice may use a regulation-adopted provision as the control. A regulation-endorsed control versus a simulation of the conditions of application to occur establishes a new material as being equivalent to the regulatory provision in terms of quality, strength, effectiveness, fire resistance, durability, and safety.

10.5 The accuracy of the provisions provided herein may be reliant upon the published properties of raw materials, which are defined by the grade mark, grade stamp, mill certificate, or duly authenticated reports from approved agencies and/or approved sources provided by the supplier. These are presumed to be minimum properties and relied upon to be accurate. The reliability of DrJ's engineering practice, as contained in this duly authenticated report, may be dependent upon published design properties by others.

10.6 Testing and Engineering Analysis

10.6.1 The strength, rigidity, and/or general performance of component parts and/or the integrated structure are determined by suitable tests that simulate the actual conditions of application that occur and/or by accepted engineering practice and experience.[37]

10.7 Where additional condition of use and/or regulatory compliance information is required, please search for CAMO $^{5}/_{16}$" Structural Series Screws on the DrJ Certification website.

Information contained in this report was developed using report holder's confidential intellectual property (IP) and trade secrets (TS), which is protected by Defend Trade Secrets Act 2016, © DrJ Engineering, LLC

11 Findings

11.1 As outlined in **Section 6**, CAMO $^5/_{16}$" Structural Series Screws have performance characteristics that were tested and/or meet applicable regulations. In addition, they are suitable for use pursuant to its specified purpose.

11.2 When used and installed in accordance with this duly authenticated report and the manufacturer installation instructions, CAMO $^5/_{16}$" Structural Series Screws shall be approved for the following applications:

11.2.1 To provide a connection equivalent to the connection required by the IBC Section 1604.8.3 and IRC Section R507.9.

11.2.2 To connect ledger boards to studs through zero, one, or two layers of gypsum.

11.3 Unless exempt by state statute, when CAMO $^5/_{16}$" Structural Series Screws are to be used as a structural and/or building envelope component in the design of a specific building, the design shall be performed by an RDP.

11.4 Any application specific issues not addressed herein can be engineered by an RDP. Assistance with engineering is available from National Nail Corporation or CAMO.

11.5 IBC Section 104.2.3[38] (IRC Section R104.2.2[39] and IFC Section 104.2.3[40] are similar) in pertinent part state:

> **104.2.3 Alternative Materials, Design and Methods of Construction and Equipment.** The provisions of this code are not intended to prevent the installation of any material or to prohibit any design or method of construction not specifically prescribed by this code, provided that any such alternative is not specifically prohibited by this code and has been approved.

11.6 **Approved:**[41] Building regulations require that the building official shall accept duly authenticated reports.[42]

11.6.1 An approved agency is *"approved"* when it is ANAB ISO/IEC 17065 accredited.

11.6.2 An approved source is *"approved"* when an RDP is properly licensed to transact engineering commerce.

11.6.3 Federal law, Title 18 US Code Section 242, requires that, where the alternative product, material, service, design, assembly, and/or method of construction is not approved, the building official shall respond in writing, stating the reasons why the alternative was not approved. Denial without written reason deprives a protected right to free and fair competition in the marketplace.

11.7 DrJ is a licensed engineering company, employs licensed RDPs and is an ANAB Accredited Product Certification Body – Accreditation #1131.

11.8 Through the IAF Multilateral Arrangement (MLA), this duly authenticated report can be used to obtain product approval in any jurisdiction or country because all ANAB ISO/IEC 17065 duly authenticated reports are equivalent.[43]

12 Conditions of Use

12.1 Material properties shall not fall outside the boundaries defined in **Section 6**.

12.2 As defined in **Section 6**, where material and/or engineering mechanics properties are created for load resisting design purposes, the resistance to the applied load shall not exceed the ability of the defined properties to resist those loads using the principles of accepted engineering practice.

12.3 As listed herein, CAMO $^5/_{16}$" Structural Series Screws shall not be used:

12.3.1 If spacing in ledger to band joist applications exceeds the values listed in **Table 2** and **Table 3**.

12.3.2 If loading in ledger to stud applications exceeds the values listed in **Table 4**.

12.4 CAMO $^5/_{16}$" Structural Series Screws covered by this report shall be installed in accordance with this report and the manufacturer installation instructions.

Information contained in this report was developed using report holder's confidential intellectual property (IP) and trade secrets (TS), which is protected by Defend Trade Secrets Act 2016, © DrJ Engineering, LLC

12.5 Use of fasteners in locations exposed to saltwater or saltwater spray is outside the scope of this evaluation report.

12.6 When required by adopted legislation and enforced by the building official, also known as the Authority Having Jurisdiction (AHJ) in which the project is to be constructed:

12.6.1 Any calculations incorporated into the construction documents shall conform to accepted engineering practice and, when prepared by an approved source, shall be approved when signed and sealed.

12.6.2 This report and the installation instructions shall be submitted at the time of permit application.

12.6.3 This innovative product has an internal quality control program and a third-party quality assurance program.

12.6.4 At a minimum, this innovative product shall be installed per **Section 9**.

12.6.5 The review of this report by the AHJ shall comply with IBC Section 104.2.3.2 and IBC Section 105.3.1.

12.6.6 This innovative product has an internal quality control program and a third party quality assurance program in accordance with IBC Section 104.7.2, IBC Section 110.4, IBC Section 1703, IRC Section R104.7.2, and IRC Section R109.2.

12.6.7 The application of this innovative product in the context of this report is dependent upon the accuracy of the construction documents, implementation of installation instructions, inspection as required by IBC Section 110.3, IRC Section R109.2, and any other regulatory requirements that may apply.

12.7 The approval of this report by the AHJ shall comply with IBC Section 1707.1, where legislation states in part, *"the* building official *shall make, or cause to be made, the necessary tests and investigations; or the* building official *shall accept duly authenticated reports from* approved agencies *in respect to the quality and manner of use of new materials or assemblies as provided for in* Section 104.2.3*"*, all of IBC Section 104, and IBC Section 105.3.

12.8 Design loads shall be determined in accordance with the regulations adopted by the jurisdiction in which the project is to be constructed and/or by the building designer (i.e., owner or RDP).

12.9 The actual design, suitability, and use of this report for any particular building, is the responsibility of the owner or the authorized agent of the owner.

13 Identification

13.1 CAMO $^{5}/_{16}$" Structural Series Screws, as listed in **Section 1.1**, is identified by a label on the board or packaging material bearing the manufacturer name, product name, this report number, and other information to confirm code compliance.

13.2 Additional technical information can be found at www.camofasteners.com and www.nationalnail.com.

14 Review Schedule

14.1 This report is subject to periodic review and revision. For the latest version, visit www.drjcertification.org.

14.2 For information on the status of this report, please contact DrJ Certification.

Information contained in this report was developed using report holder's confidential intellectual property (IP) and trade secrets (TS), which is protected by Defend Trade Secrets Act 2016, © DrJ Engineering, LLC

Issue Date: February 19, 2024

Subject to Renewal: October 1, 2027

FBC Supplement to Report Number 2102-02

REPORT HOLDER: National Nail® Corporation dba CAMO®

1 Evaluation Subject

1.1 CAMO $^{5}/_{16}$" Structural Series Screws

2 Purpose and Scope

2.1 Purpose

2.1.1 The purpose of this Report Supplement is to show CAMO $^{5}/_{16}$" Structural Series Screws, recognized in Report Number 2102-02, have also been evaluated for compliance with the codes listed below as adopted by the Florida Building Commission.

2.2 *Applicable Code Editions*

2.2.1 *FBC-B—20, 23: Florida Building Code – Building (FL 41741)*

2.2.2 *FBC-R—20, 23: Florida Building Code – Residential (FL 41741)*

3 Conclusions

3.1 CAMO $^{5}/_{16}$" Structural Series Screws, described in Report Number 2102-02, comply with the FBC-B and FBC-R and are subject to the conditions of use described in this supplement.

3.2 Where there are variations between the IBC and IRC and the FBC-B and FBC-R applicable to this report, they are listed here:

3.2.1 FBC-B Section 104.4 and Section 110.4 are reserved.

3.2.2 FBC-R Section R104 and Section R109 are reserved.

3.2.3 FBC-B Section 1604.8.3 replaces IBC Section 1604.8.3.

3.2.4 FBC-B Section 2304.10.5 replaces IBC Section 2304.10.6.

3.2.5 FBC-R Table R507.8.1.3(1) replaces IRC Table R507.9.1.3(1).

3.2.6 FBC-R Section R507.9 replaces IRC Section R507.9.

4 Conditions of Use

4.1 CAMO $^{5}/_{16}$" Structural Series Screws, described in Report Number 2102-02, must comply with all of the following conditions:

4.1.1 All applicable sections in Report Number 2102-02.

4.1.2 The design, installation, and inspections are in accordance with additional requirements of FBC-B Chapter 16 and Chapter 17, as applicable.

Information contained in this report was developed using report holder's confidential intellectual property (IP) and trade secrets (TS), which is protected by Defend Trade Secrets Act 2016, © DrJ Engineering, LLC

Notes

1 For more information, visit drjcertification.org or call us at 608-310-6748.

2 2021 IRC Section R317.3

3 Capitalized terms and responsibilities are defined pursuant to the applicable building code, applicable reference standards, the latest edition of TPI 1, the NDS, AISI S202, US professional engineering law, Canadian building code, Canada professional engineering law, Qualtim External Appendix A: Definitions/Commentary, Qualtim External Appendix B: Project/Deliverables, Qualtim External Appendix C: Intellectual Property and Trade Secrets, definitions created within Design Drawings and/or definitions within Reference Sheets. Beyond this, terms not defined shall have ordinarily accepted meanings as the context implies. Words used in the present tense include the future; words stated in the masculine gender include the feminine and neuter; the singular number includes the plural and the plural, the singular.

4 https://up.codes/viewer/mississippi/ibc-2024/chapter/17/special-inspections-and-tests#1702

5 Alternative Materials, Design and Methods of Construction and Equipment: The provisions of any regulation code are not intended to prevent the installation of any material or to prohibit any design or method of construction not specifically prescribed by a regulation. Please review https://www.justice.gov/atr/mission and https://up.codes/viewer/mississippi/ibc-2024/chapter/1/scope-and-administration#104.2.3

6 https://up.codes/viewer/mississippi/ibc-2024/chapter/17/special-inspections-and-tests#1706.2:~:text=the%20design%20strengths%20and%20permissible%20stresses%20shall%20be%20established%20by%20tests

7 The design strengths and permissible stresses of any structural material shall conform to the specifications and methods of design of accepted engineering practice. https://up.codes/viewer/mississippi/ibc-2024/chapter/17/special-inspections-and-tests#1706.1:~:text=Conformance%20to%20Standards-,The%20design%20strengths%20and%20permissible%20stresses,-of%20any%20structural

8 https://up.codes/viewer/mississippi/ibc-2024/chapter/17/special-inspections-and-tests#1707.1:~:text=the%20building%20official%20shall%20make%2C%20or%20cause%20to%20be%20made%2C%20the%20necessary%20tests%20and%20investigations%3B%20or%20the%20building%20official%20shall%20accept%20duly%20authenticated%20reports%20from%20approved%20agencies%20in%20respect%20to%20the%20quality%20and%20manner%20of%20use%20of%20new%20materials%20or%20assemblies%20as%20provided%20for%20in%20Section%20104.2.3.

9 https://up.codes/viewer/mississippi/ibc-2024/chapter/17/special-inspections-and-tests#1703.4.2

10 https://up.codes/viewer/mississippi/ibc-2024/chapter/2/definitions#approved_agency

11 https://up.codes/viewer/mississippi/ibc-2024/chapter/2/definitions#approved_source

12 https://www.law.cornell.edu/uscode/text/18/1832 (b) Any organization that commits any offense described in subsection (a) shall be fined not more than the greater of $5,000,000 or 3 times the value of the stolen trade secret to the organization, including expenses for research and design and other costs of reproducing the trade secret that the organization has thereby avoided. The federal government and each state have a public records act. To follow DTSA and comply state public records and trade secret legislation requires approval through ANAB ISO/IEC 17065 accredited certification bodies or approved sources. For more information, please review this website: Intellectual Property and Trade Secrets.

13 https://www.nspe.org/resources/issues-and-advocacy/professional-policies-and-position-statements/regulation-professional AND https://apassociation.org/list-of-engineering-boards-in-each-state-archive/

14 https://www.cbitest.com/accreditation/

15 https://up.codes/viewer/mississippi/ibc-2024/chapter/1/scope-and-administration#104.1:~:text=directed%20to%20enforce%20the%20provisions%20of%20this%20code

16 https://up.codes/viewer/mississippi/ibc-2024/chapter/1/scope-and-administration#104.2.3 AND https://up.codes/viewer/mississippi/ibc-2024/chapter/1/scope-and-administration#105.3.1

17 https://up.codes/viewer/mississippi/ibc-2024/chapter/17/special-inspections-and-tests#1707.1

18 https://iaf.nu/en/about-iaf-mla/#:~:text=Once%20an%20accreditation%20body%20is%20a%20signatory%20of%20the%20IAF%20MLA%2C%20it%20is%20required%20to%20recognise%20certificates%20and%20validation%20and%20verification%20statements%20issued%20by%20conformity%20assessment%20bodies%20accredited%20by%20all%20other%20signatories%20of%20the%20IAF%20MLA%2C%20with%20the%20appropriate%20scope

19 True for all ANAB accredited product evaluation agencies and all International Trade Agreements.

20 https://www.justice.gov/crt/deprivation-rights-under-color-law AND https://www.justice.gov/atr/mission

21 Unless otherwise noted, the links referenced herein use un-amended versions of the 2024 International Code Council (ICC) 2024 International Code Council (ICC) model codes as foundation references. Mississippi versions of the IBC 2024 and the IRC 2024 are un-amended. This material, product, design, service and/or method of construction also complies with the 2000-2012 versions of the referenced codes and the standards referenced therein. As pertinent to this technical and code compliance evaluation, CBI and/or DrJ staff have reviewed any state or local regulatory amendments to assure this report is in compliance.

22 See Adoptions by Publisher for the latest adoption of a non-amended or amended model code by the local jurisdiction. https://up.codes/codes/general

23 See Adoptions by Publisher for the latest adoption of a non-amended or amended model code by state. https://up.codes/codes/general

24 https://www.ecfr.gov/current/title-24/subtitle-B/chapter-XX/part-3282/subpart-A/section-3282.14

25 https://www.ecfr.gov/current/title-24/subtitle-B/chapter-XX/part-3280

26 All references to the FBC-B and FBC-R are the same as the 2021 IBC and 2021 IRC unless otherwise noted in the Florida Supplement at the end of this report.

27 All references to the LABC and LARC are the same as the 2018 IBC and 2018 IRC unless otherwise noted in the LABC and LARC Supplement at the end of this report.

28 https://www.ecfr.gov/current/title-24/subtitle-B/chapter-XX/part-3280#p-3280.2(Listed%20or%20certified); https://up.codes/viewer/mississippi/ibc-2024/chapter/2/definitions#listed AND https://up.codes/viewer/mississippi/ibc-2024/chapter/2/definitions#labeled

29 2021 IBC Section 104.11

30 2021 IRC Section R104.11

31 https://up.codes/viewer/mississippi/ibc-2024/chapter/17/special-inspections-and-tests#1703.4

Information contained in this report was developed using report holder's confidential intellectual property (IP) and trade secrets (TS), which is protected by Defend Trade Secrets Act 2016, © DrJ Engineering, LLC

32 https://www.ecfr.gov/current/title-24/subtitle-B/chapter-XX/part-3280#:~:text=All%20construction%20methods%20shall%20be%20in%20conformance%20with%20accepted%20engineering%20practices%20to%20insure%20durable%2C%20livable%2C%20and%20safe%20housing%20and%20shall%20demonstrate%20acceptable%20workmanship%20reflecting%20journeyman%20quality%20of%20work%20of%20the%20various%20trades

33 https://www.ecfr.gov/current/title-24/subtitle-B/chapter-XX/part-3280#:~:text=The%20strength%20and%20rigidity%20of%20the%20component%20parts%20and/or%20the%20integrated%20structure%20shall%20be%20determined%20by%20engineering%20analysis%20or%20by%20suitable%20load%20tests%20to%20simulate%20the%20actual%20loads%20and%20conditions%20of%20application%20that%20occur

34 The term "band joist" is used throughout this report. Other regional terms synonymous with band joist include rim board, band board, header board, and header joist.

35 Qualification is performed by a legislatively defined Accreditation Body. ANSI National Accreditation Board (ANAB) is the largest independent accreditation body in North America and provides services in more than 75 countries. DrJ is an ANAB accredited product certification body.

36 https://anabpd.ansi.org/Accreditation/product-certification/AllDirectoryDetails?prgID=1&orgID=2125&statusID=4#:~:text=Bill%20Payment%20Date-,Accredited%20Scopes,-13%20ENVIRONMENT.%20HEALTH

37 See Code of Federal Regulations (CFR) Title 24 Subtitle B Chapter XX Part 3280 for definition: https://www.ecfr.gov/current/title-24/subtitle-B/chapter-XX/part-3280

38 2021 IBC Section 104.11

39 2021 IRC Section R104.11

40 2018: https://up.codes/viewer/wyoming/ifc-2018/chapter/1/scope-and-administration#104.9 AND 2021: https://up.codes/viewer/wyoming/ibc-2021/chapter/1/scope-and-administration#104.11

41 Approved is an adjective that modifies the noun after it. For example, Approved Agency means that the Agency is accepted officially as being suitable in a particular situation. This example conforms to IBC/IRC/IFC Section 201.4 (https://up.codes/viewer/mississippi/ibc-2024/chapter/2/definitions#201.4) where the building code authorizes sentences to have an ordinarily accepted meaning such as the context implies.

42 https://up.codes/viewer/mississippi/ibc-2024/chapter/17/special-inspections-and-tests#1707.1

43 Multilateral approval is true for all ANAB accredited product evaluation agencies and all International Trade Agreements.

Information contained in this report was developed using report holder's confidential intellectual property (IP) and trade secrets (TS), which is protected by Defend Trade Secrets Act 2016, © DrJ Engineering, LLC